OPTIONS

OPTION No	OPTION	DRG.No.
1	FIXED PINS	REL2631
6	BIG BITE LUG	REL2549
YES/NO	DRAIN HOLES	REL2515
YES/NO	FULLY WELD ALL CHANNELS	

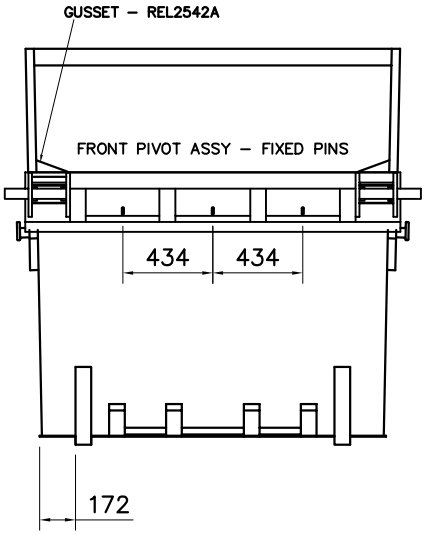

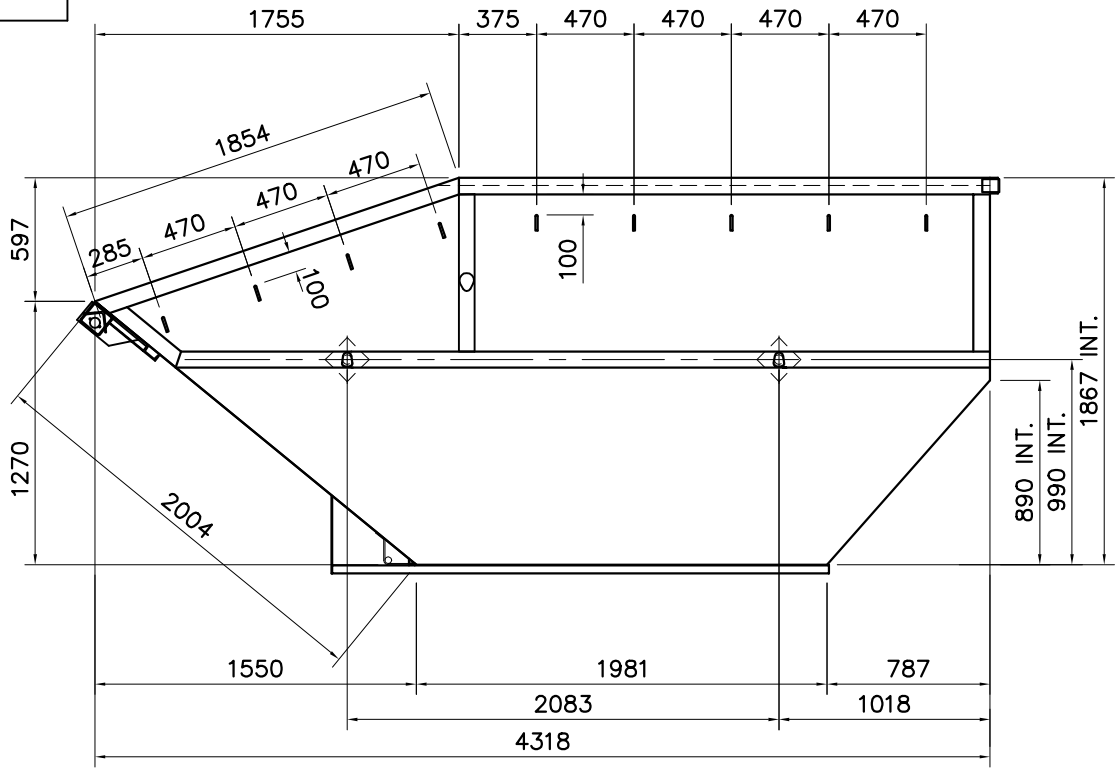

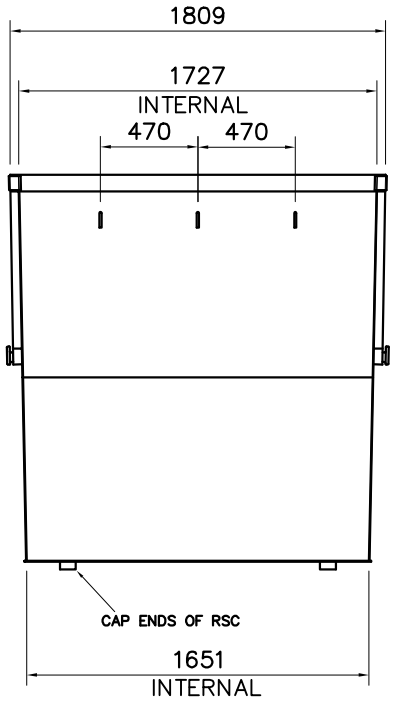

FIXED ITEMS

DESCRIPTION	DRG.No.
PLATE DETAILS	REL2582B
SECTION DETAILS	REL2582C
TIPPING BAR	REL2506A

NOTE:– FULLY WELD ALL PLATES INSIDE & OUTSIDE
FULLY WELD LUG CHANNELS, STITCH WELD ALL OTHERS
FULLY WELD PIVOT ASSEMBLY TO FRONT PLATE.

F:\STDREL\2582A

SELLERS ENGINEERING LIMITED
CHADDERTON . OLDHAM
LANCASHIRE

REV.	1	2	3	4	5
DATE					
INITIAL					
ECR					

REV.	6	7	8	9	10
DATE					
INITIAL					
ECR					

QTY:

ORDER No :

DRAWING NAME :
14 CU YD OPEN TAPERED
REL CONTAINER

SCALE 1: 25

PROJECTION

		DATE
DRAWN	A.K.	18/02/98
CHECKED	K.R.	18/02/98

CLIENT :

DRG. No. : REL2582 /1 /6

SHT	REV
A	0

This drawing is the property of Sellers Engineering Ltd and must not be copied, reproduced or used for any purpose whatsoever, except that for which it is supplied without the express written consent of the company. We reserve the right to alter this drawing without notice.